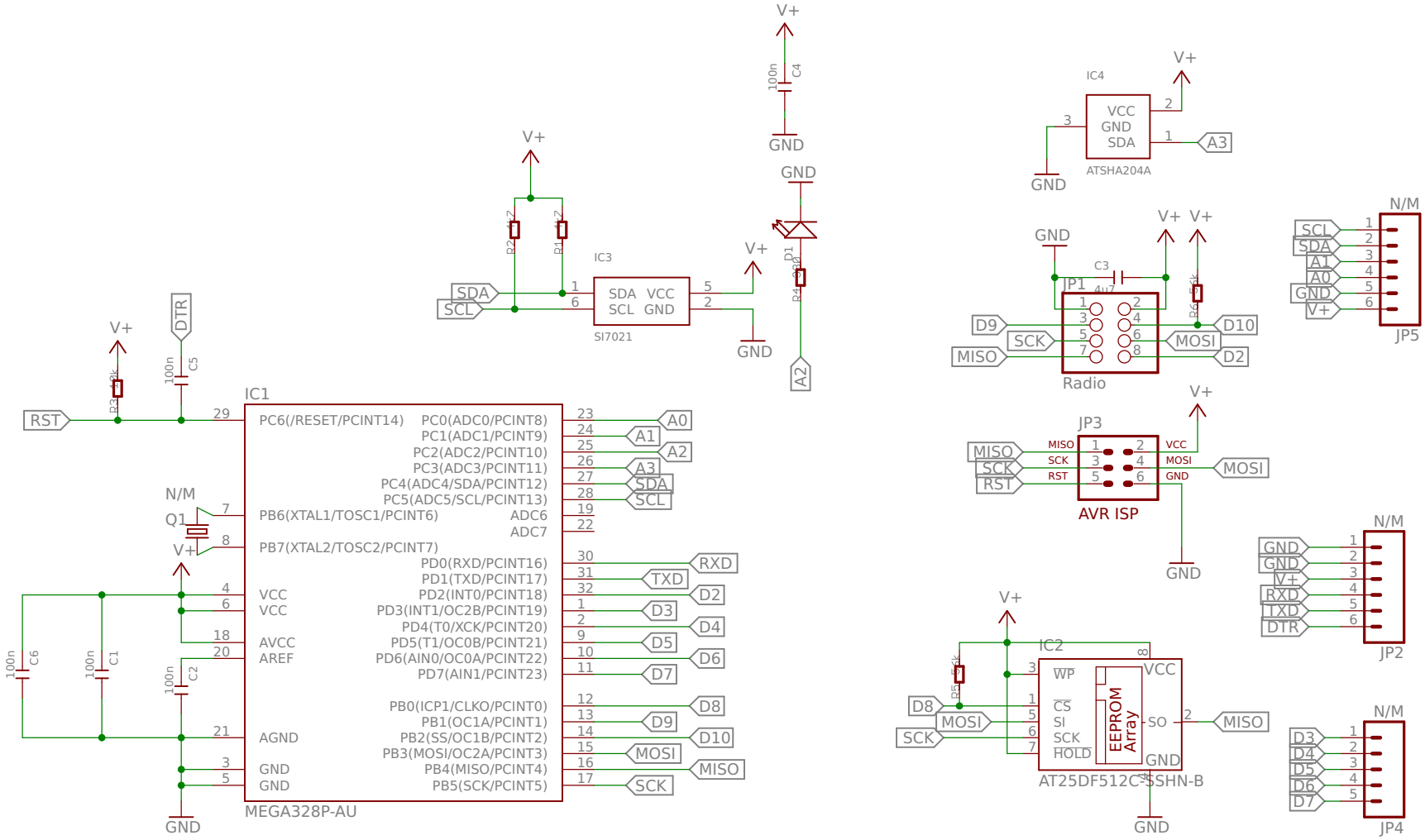

28/04/15 19.50 /home/thomas/eagle/Sensor/MySensorMicro.sch (Sheet: 1/1)